ERKNet
The European
Rare Kidney Disease
Reference Network

european
society for
paediatric
nephrology

WELCOME TO

ESPN/ERKNet
Educational Webinars on Pediatric Nephrology & Rare Kidney Diseases

Date: 05 October 2021

Topic: Bartter and Gitelman syndromes

Speaker: Martin Konrad (Münster, Germany)

Moderator: Elena Levtchenko (Leuven, Belgium)

Renal Tubular Salt Reabsorption

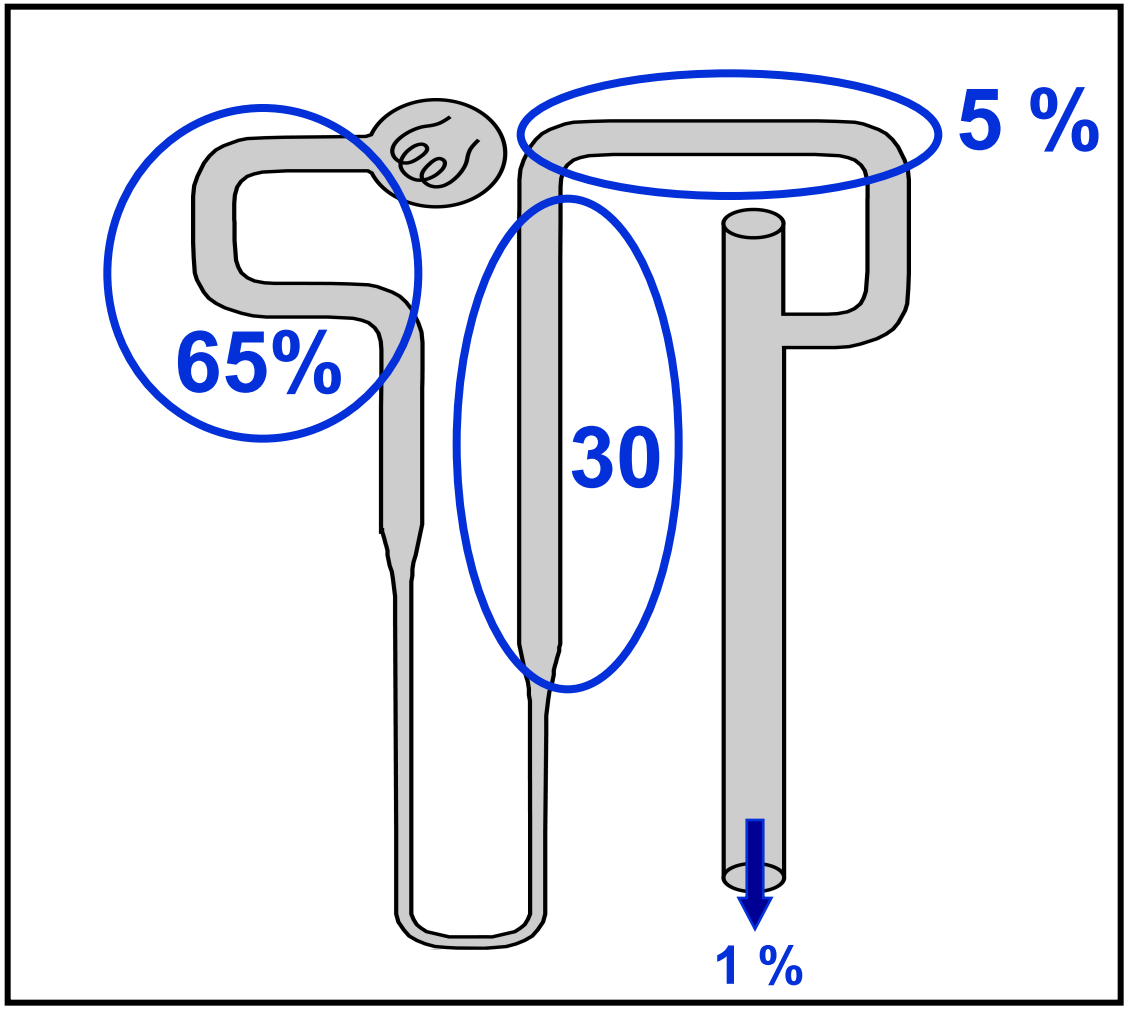

„Bartter-like syndromes“

Set of inherited tubular disorders with
hypokalemic metabolic alkalosis,
activated RAAS, and
increased prostaglandin synthesis

antenatal
Bartter syndrome

+/- deafness

classic
Bartter syndrome

Gitelman syndrome

Poll question 1

Poll question 2

Presentation of a Case

Mother: 31 years, 3rd pregnancy;
at 32 weeks of gestation complicated by polyhydramnios (amniotic fluid volume ~ 15 l), first seen in the 22nd week of gestation

No diabetes
No hydrops fetalis
Fetal ultrasound normal

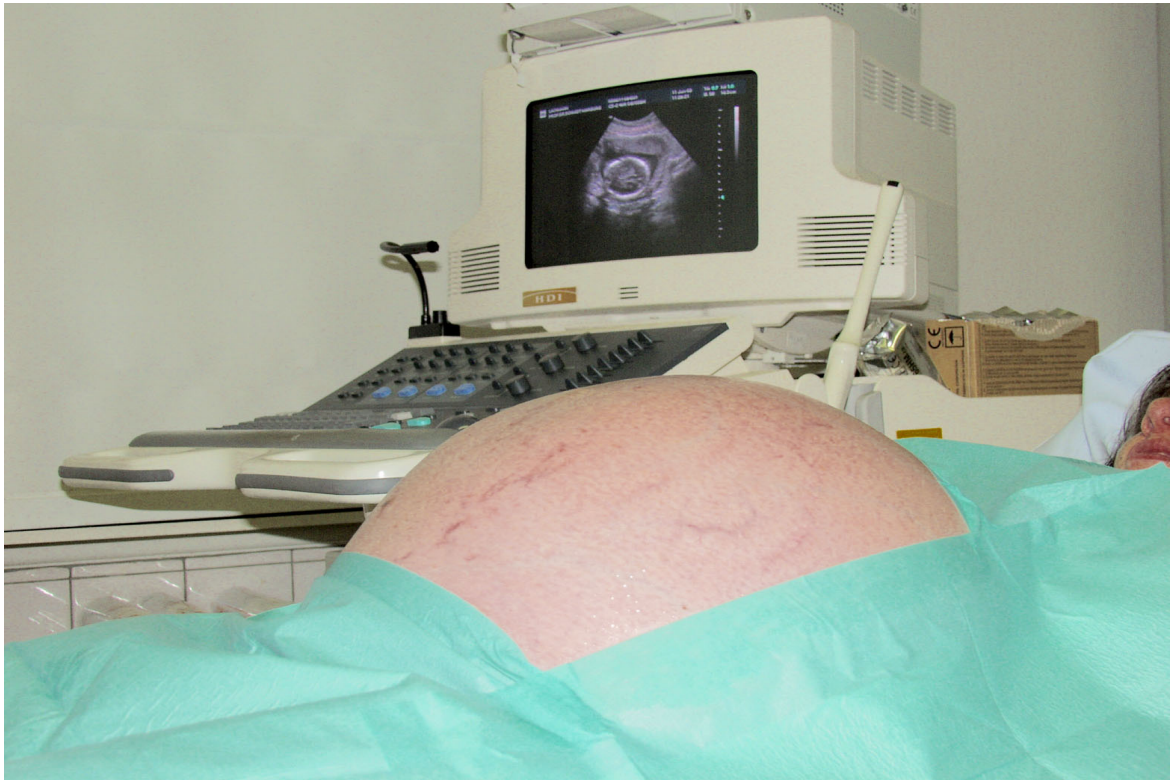

Fetal tubular disorder ?
Antenatal Bartter syndr

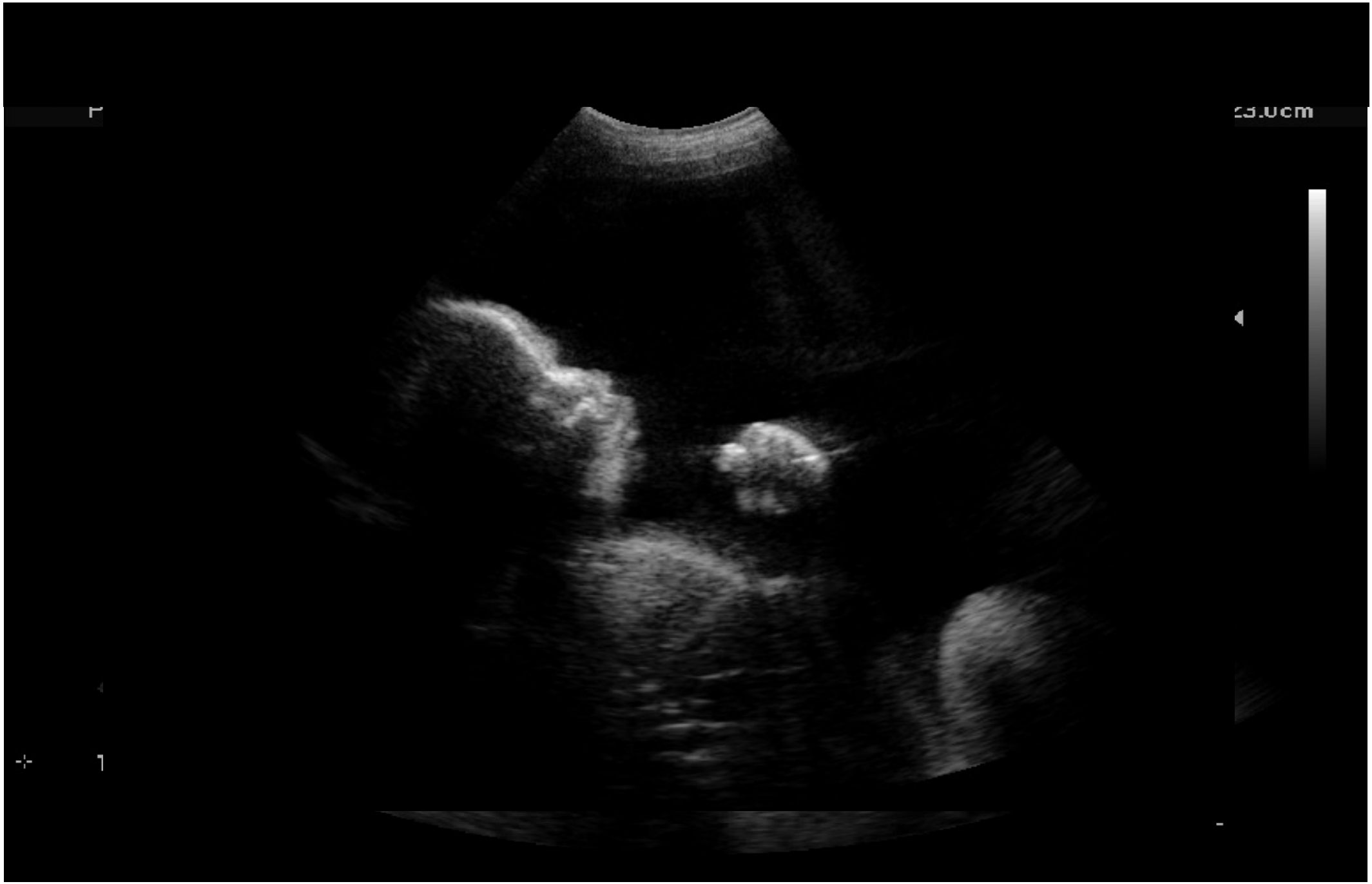
23.0cm

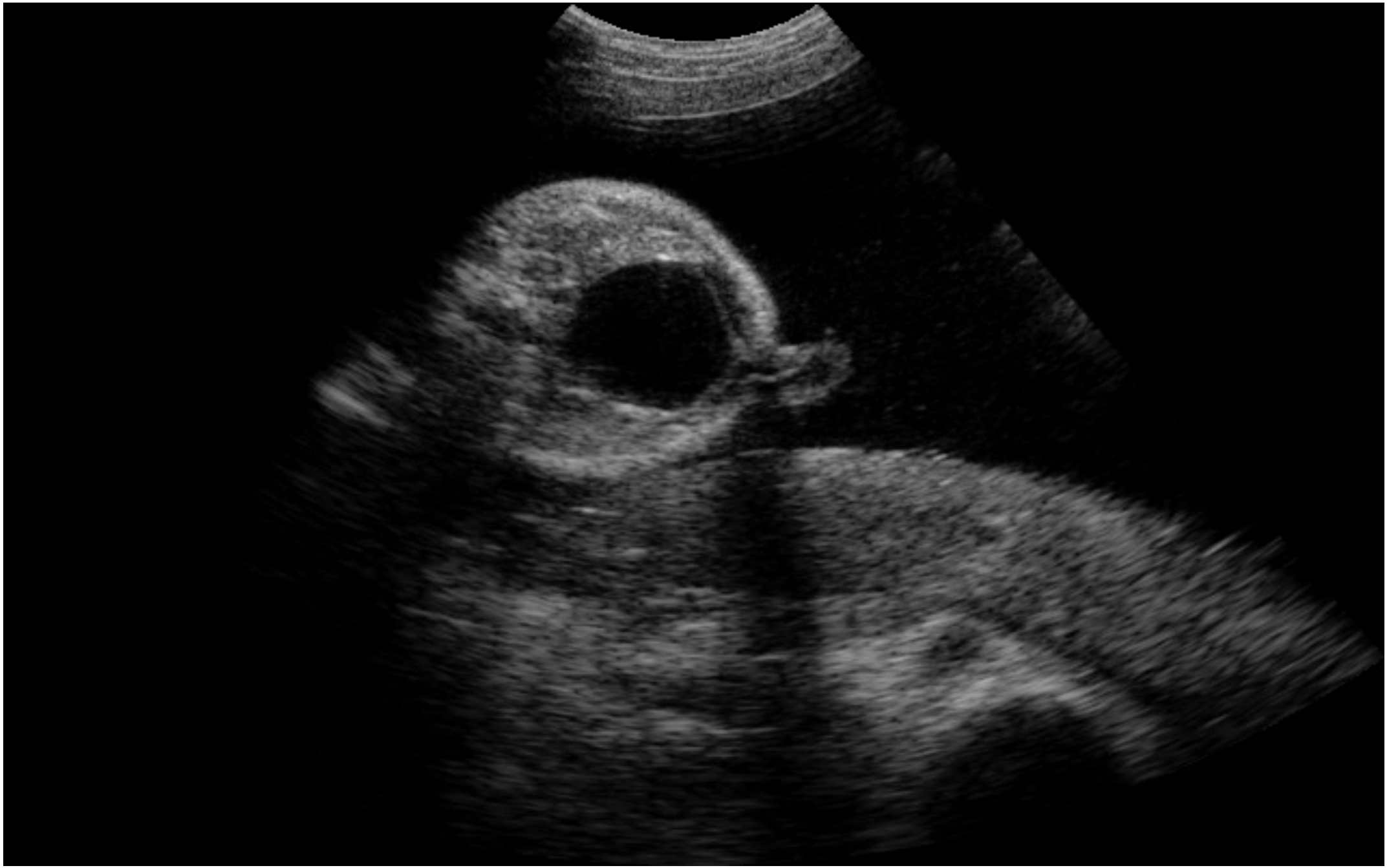

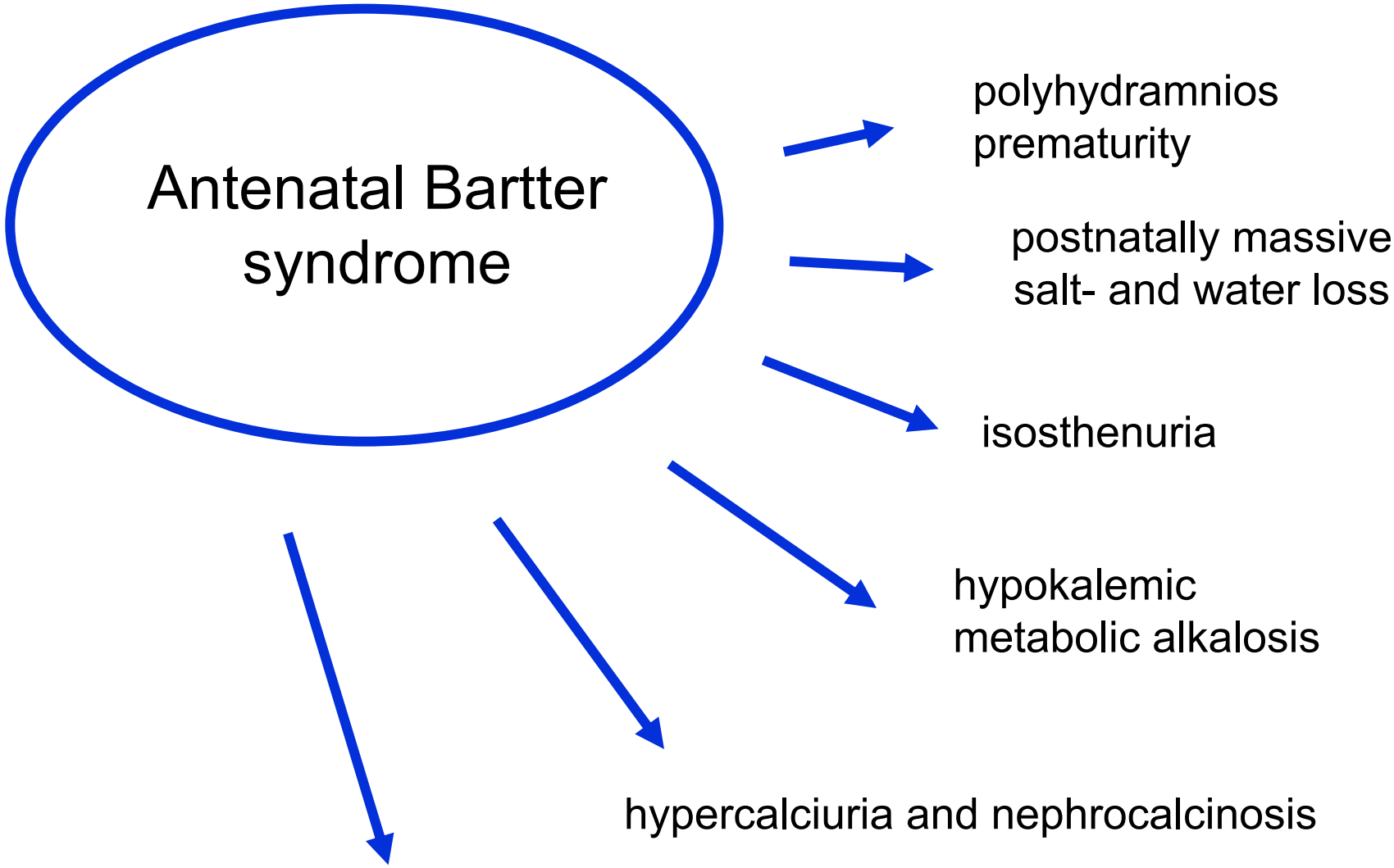

salt / fluid supply, NSAID therapy (indomethacin, celecoxib)

Nephrocalcinosis in antenatal Bartter syndrome

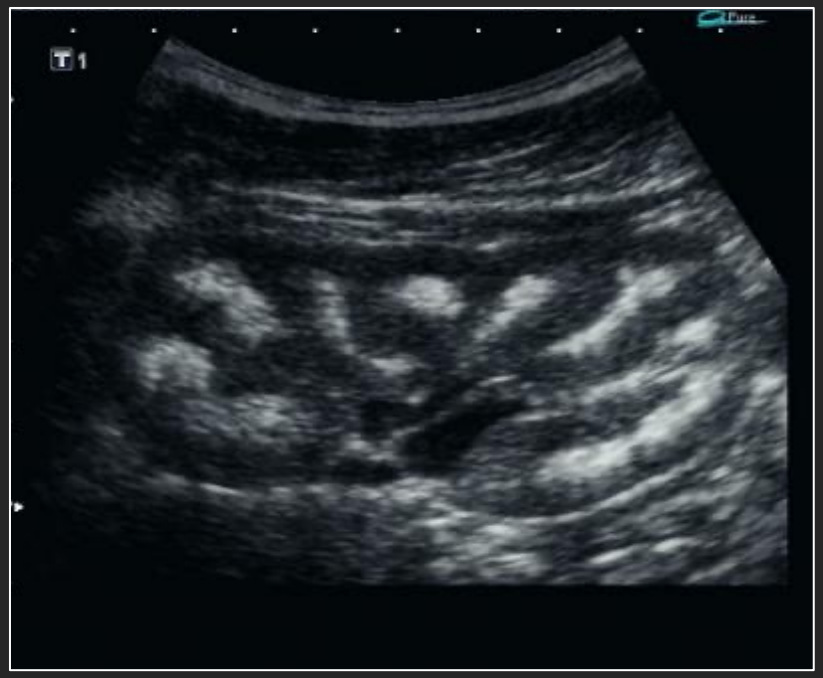

KCNJ1

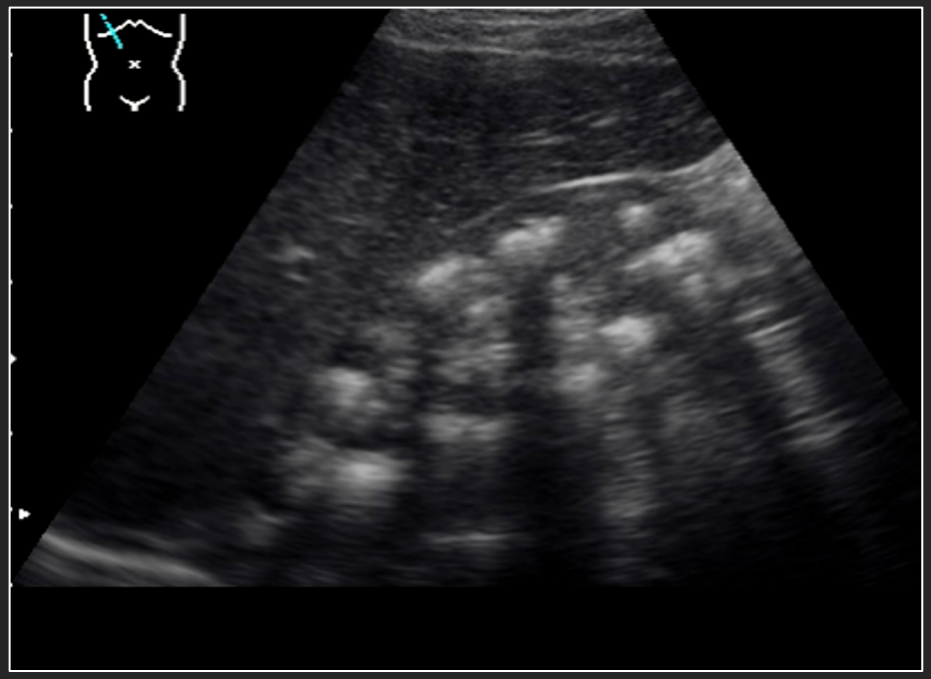

NKCC2

Prematurity in aBS

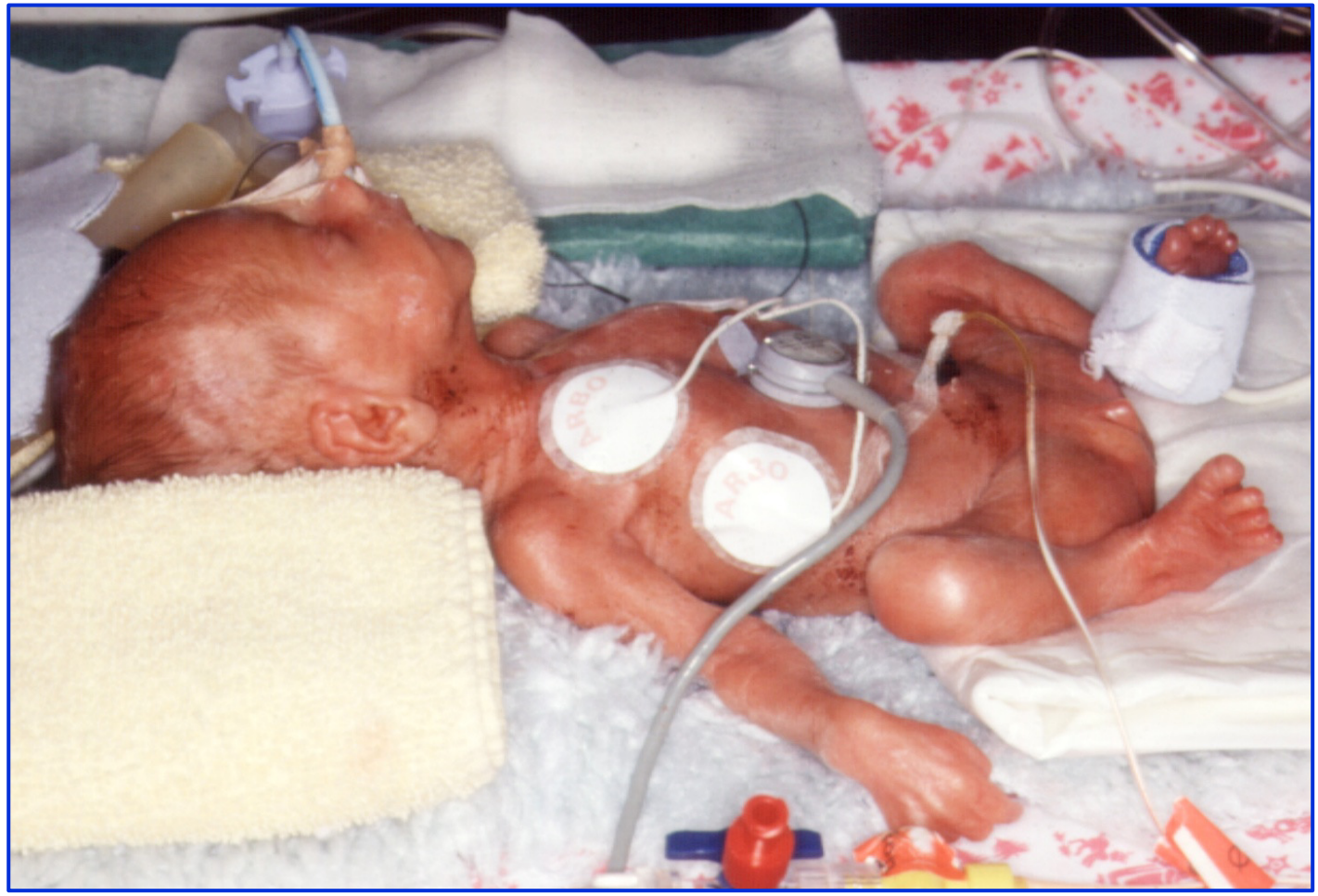

Pathophysiology of antenatal Bartter syndrome

Furosemide	Antenatal BS
mTAL	mTAL
Diuresis ↑	Diuresis ↑
Saliuresis ↑	Saliuresis ↑
Urinary calcium ↑	Urinary calcium ↑
Ototoxicity	Deafness

(*Landau et al*. 1995, *Madrigal et al*. 1997)

Pathophysiology of antenatal Bartter syndrome

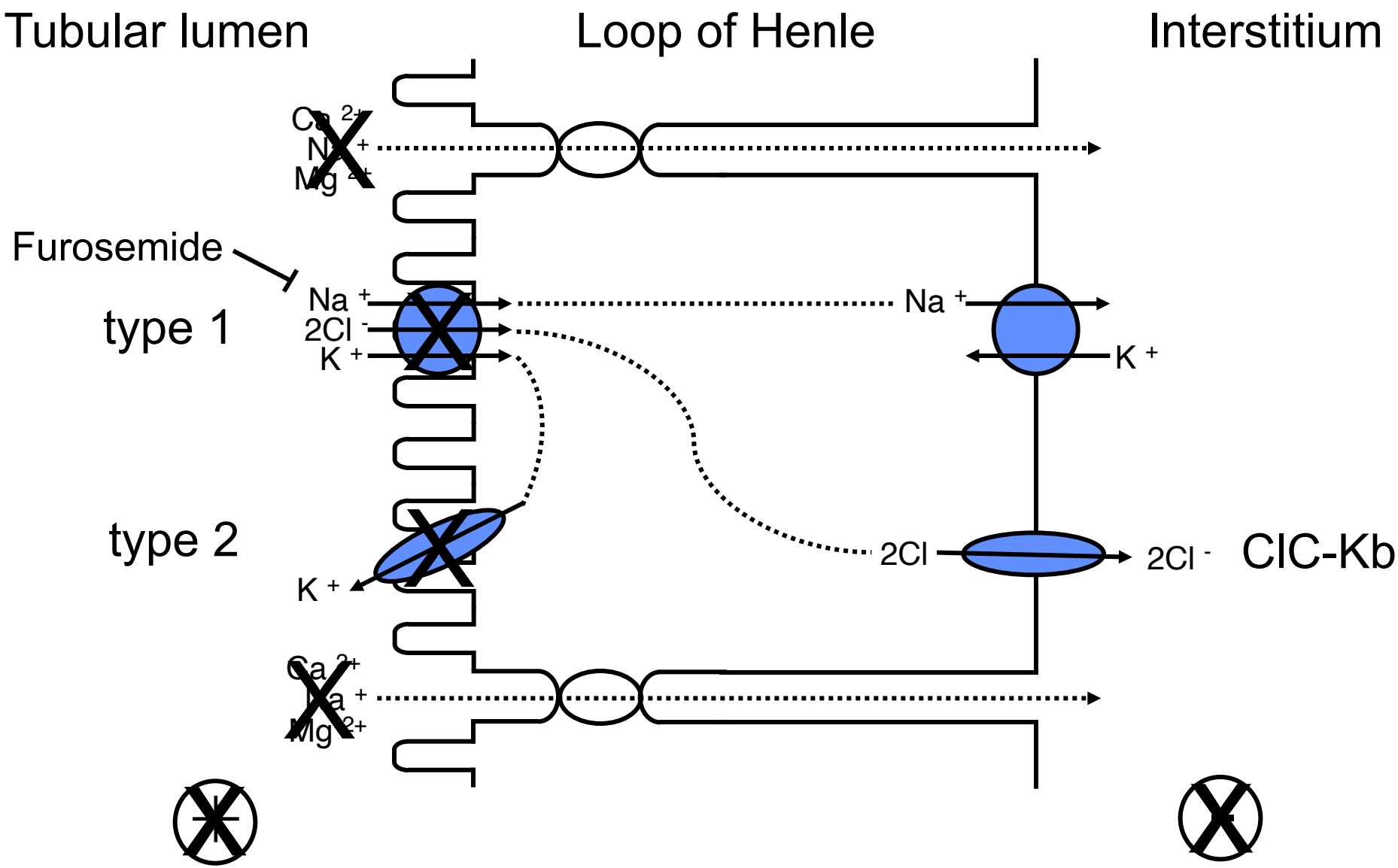

„Bartter-like syndromes“

Set of inherited tubular disorders with
hypokalemic metabolic alkalosis

antenatal
Bartter syndrome

NKCC2
KCNJ1

classic
Bartter syndrome

Gitelman syndrome

Gitelman Syndrome

- autosomal recessive inheritance
- hypokalemic alkalosis, hypomagnesemia, hypocalciuria
- Phenotypically, GS reminds chronic thiazide treatment
- Significantly decreased QOL, especially endurance, muscular weakness, fatigue
- Arrhythmia, chrondrocalcinosis

Transepithelial Chloride Transport in DCT

Gitelman Syndrome, NCC

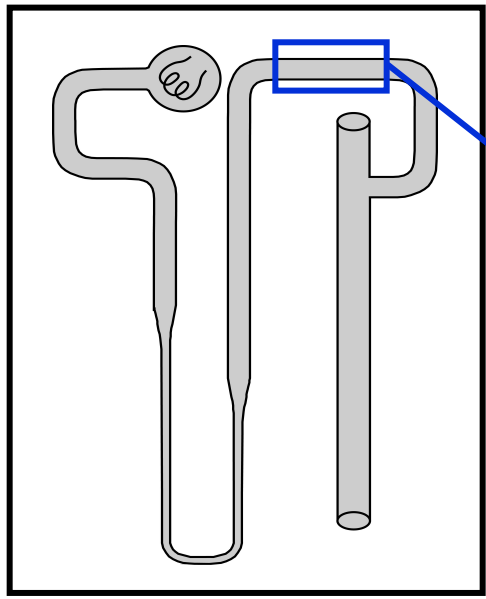

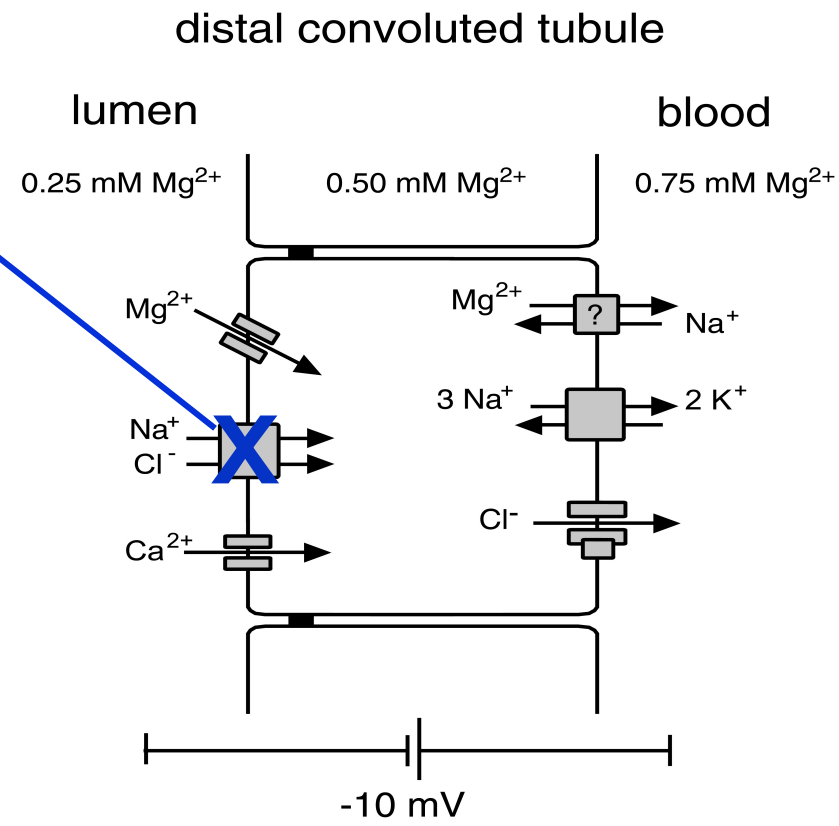

Seyberth & Schlingmann, 2011

„Bartter-like syndromes“

Set of inherited tubular disorders with hypokalemic metabolic alkalosis

antenatal Bartter syndrome

NKCC2
KCNJ1

classic Bartter syndrome

Gitelman syndrome

NCC

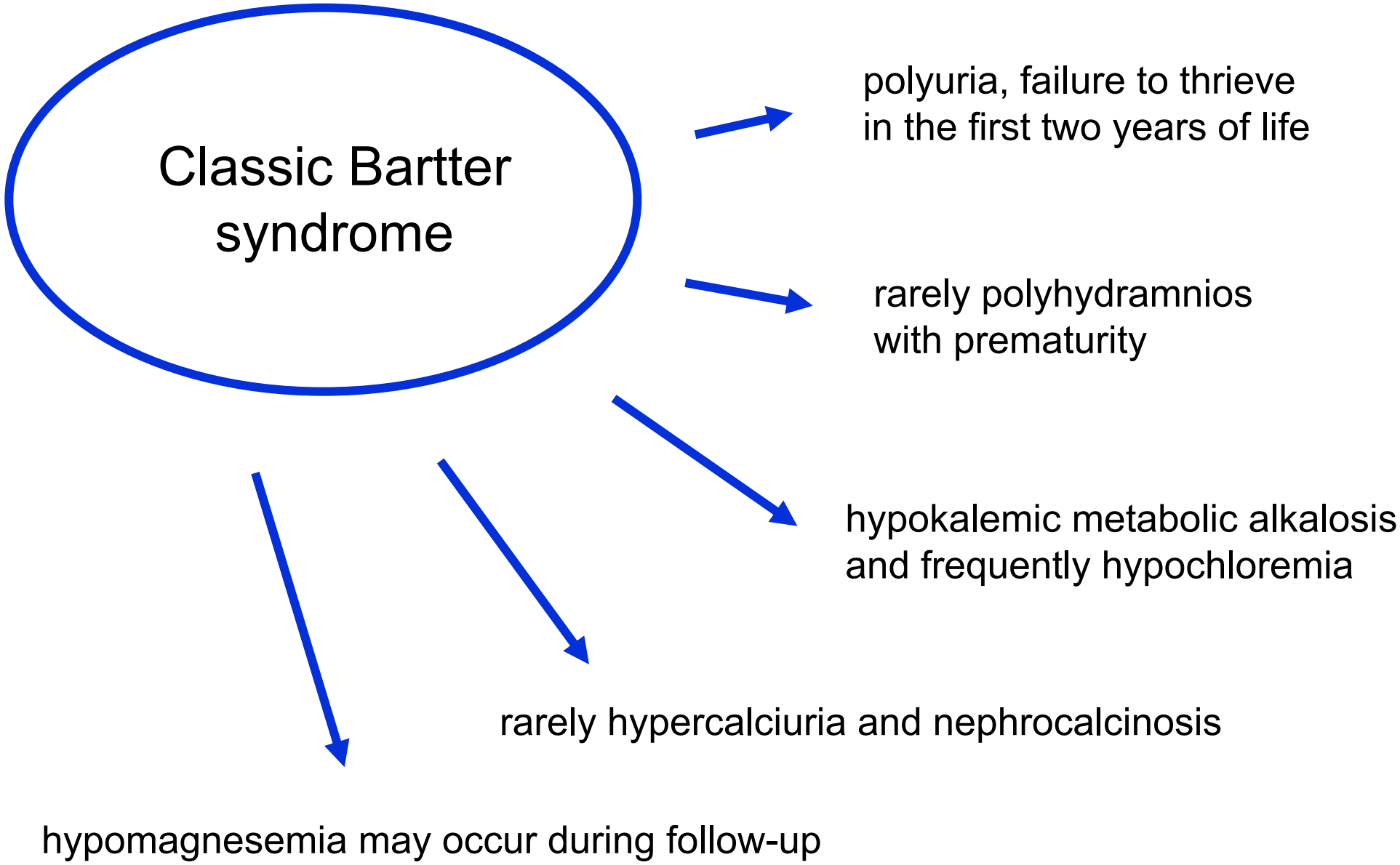
Classic Bartter syndrome
polyuria, failure to thrieve in the first two years of life
rarely polyhydramnios with prematurity
hypokalemic metabolic alkalosis and frequently hypochloremia
rarely hypercalciuria and nephrocalcinosis
hypomagnesemia may occur during follow-up

Transepithelial Chloride Transport in TAL and DCT

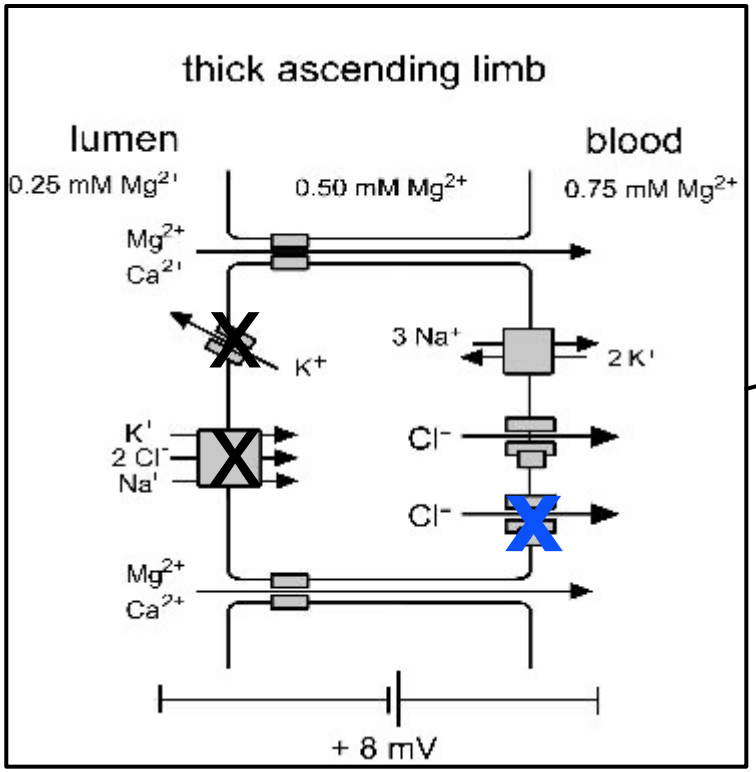

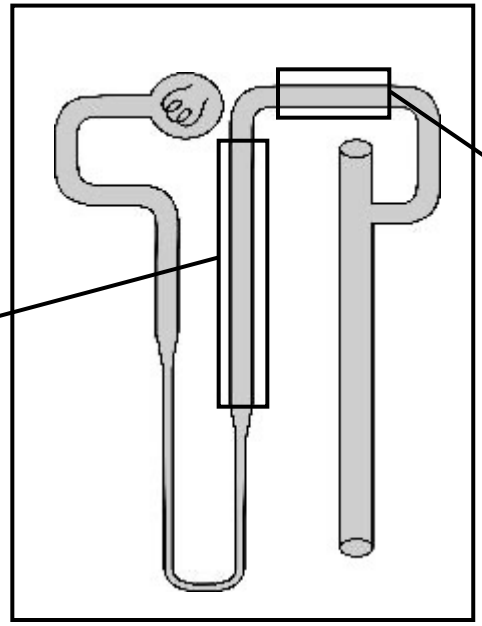

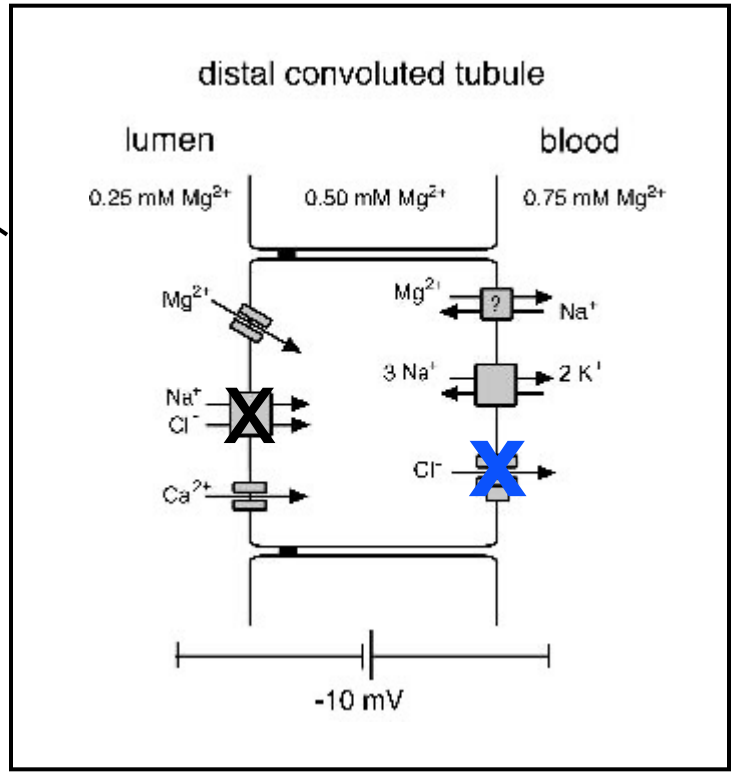

Antenatal Bartter syndrome, KCNJ1
Antenatal Bartter syndrome, NKCC2

Gitelman syndrome, NCC

Classic Bartter syndrome, ClC-Kb

Seyberth & Schlingmann, 2011

„Bartter-like syndromes“

Set of inherited tubular disorders with hypokalemic metabolic alkalosis

antenatal Bartter syndrome	classic Bartter syndrome	Gitelman syndrome
NKCC2 KCNJ1	ClC-Kb	NCC

Clinical Characterization

	KCNJ1 / NKCC2 (n=34)	ClC-Kb (n=35)	NCC (n=20)
Polyhydr/Îsosthen/NC	100 %		
Polyhydramnios	100 %	35 %	
Isosthenuria	100 %	45%	
Nephrocalcinosis	100 %	11%	
Hypocalciuria		43%	90 %
Hypomagnesemia		10%	90 %

Peters et al, Am J Med 2002

„Bartter-like syndromes“

Set of inherited tubular disorders with hypokalemic metabolic alkalosis

antenatal
Bartter syndrome
NKCC2
KCNJ1

Bartter syndrome/deafness
Barttin, combined Ka/Kb

classic
Bartter syndrome
ClC-Kb

Gitelman syndrome

NCC

Antenatal BS with sensorineural deafness

- Often more severe clinical course
- Higher needs for fluid and electrolytes
- Limited success of NSAID therapy
- Risk of renal failure

Kidneys look different…..

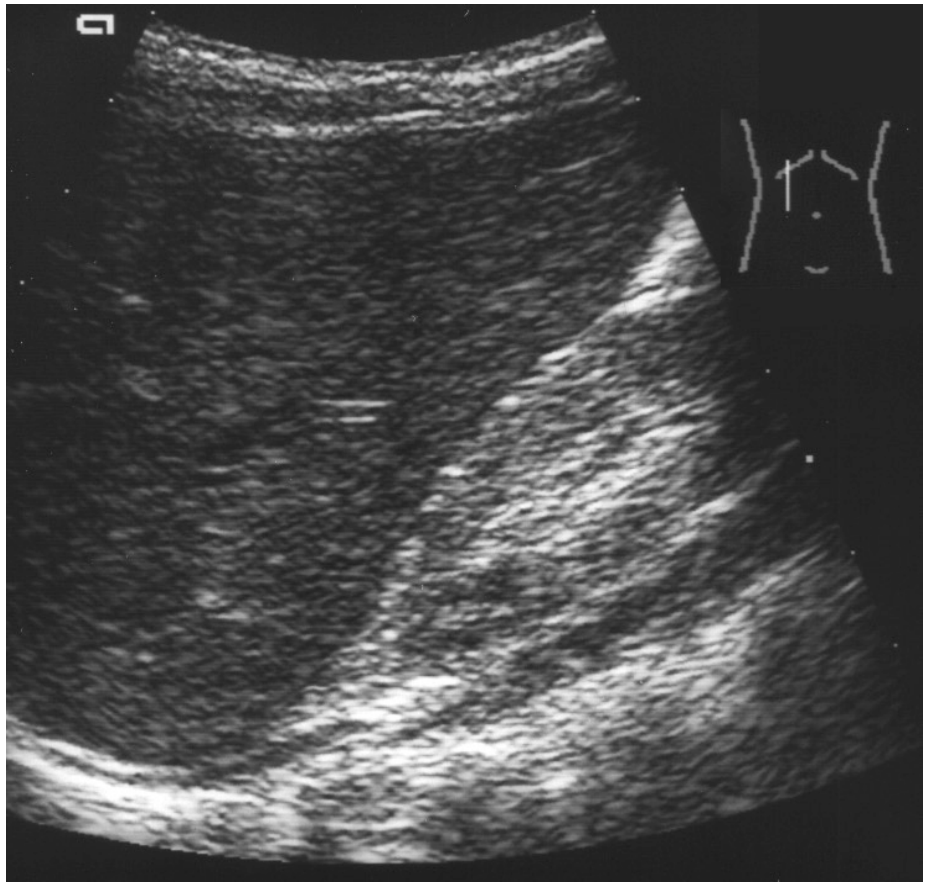

Barttin defect

- diffuse hyperechogeneity
- loss of cortico-medullary-differentiation

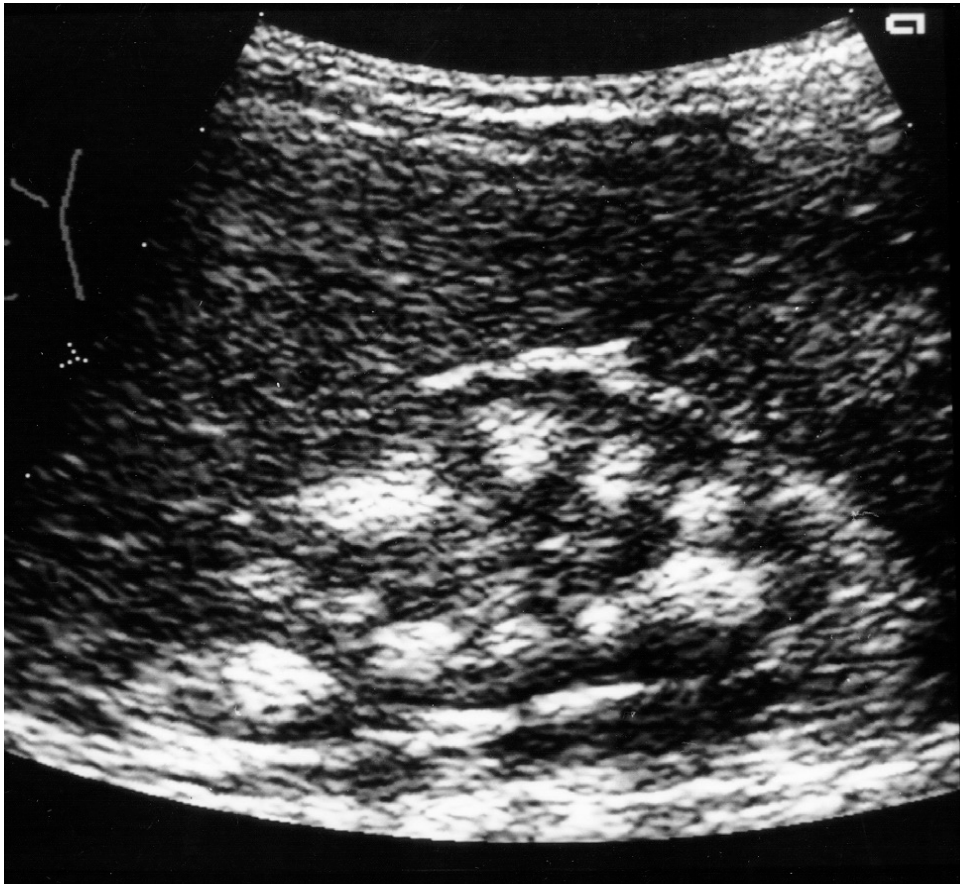

NKCC2 / ROMK

- hyperechogenic pyramids
- nephrocalcinosis type C

Pathophysiology of Barttin defects

Kidney

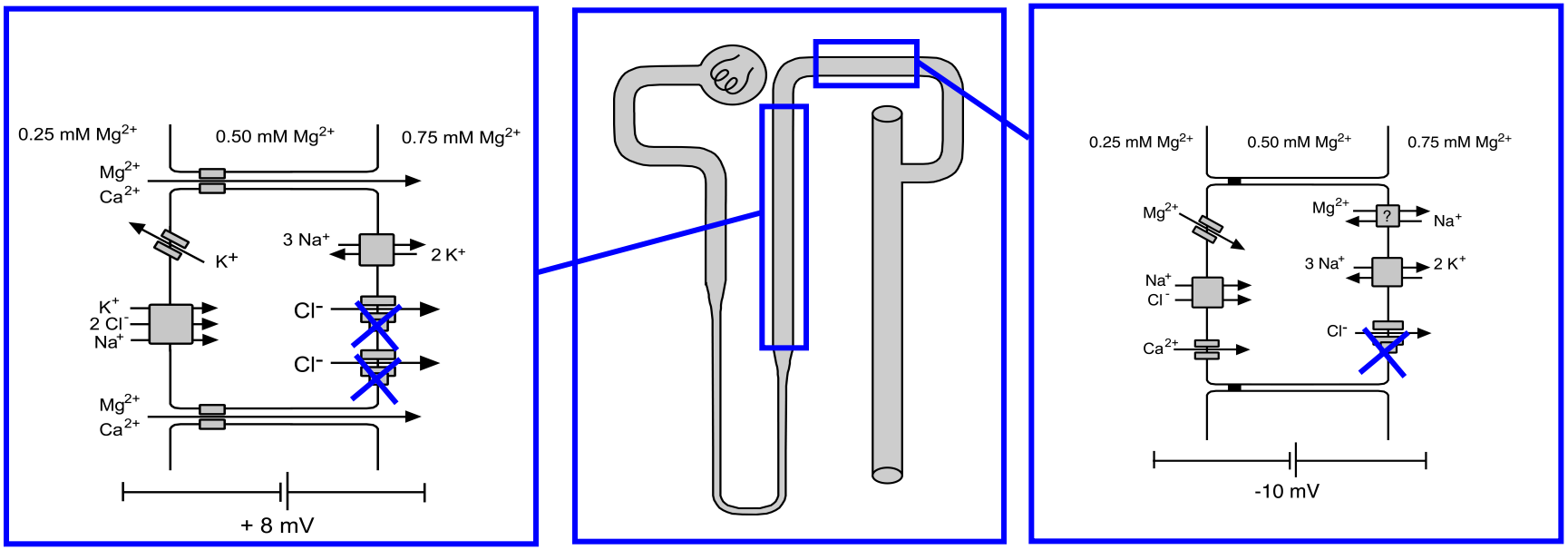

Inner ear

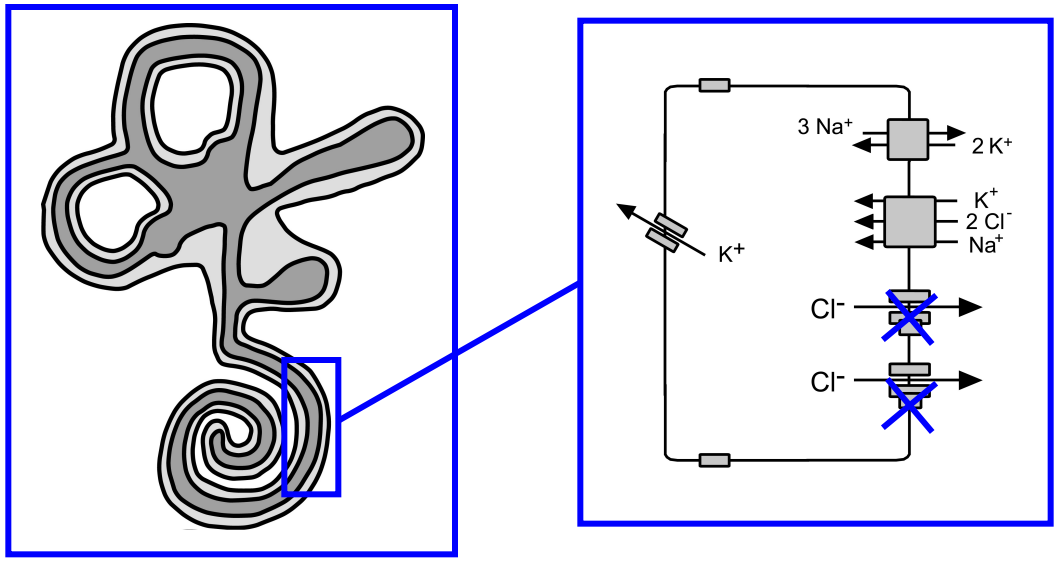

„Bartter-like syndromes“

Set of inherited tubular disorders with hypokalemic metabolic alkalosis

antenatal
Bartter syndrome
NKCC2
KCNJ1

Bartter syndrome/deafness
Barttin, combined Ka/Kb

transient Bartter sy

classic
Bartter syndrome
ClC-Kb

Gitelman syndrome

NCC

Dutch family with three boys affected by polyhydramnios and polyuria in two

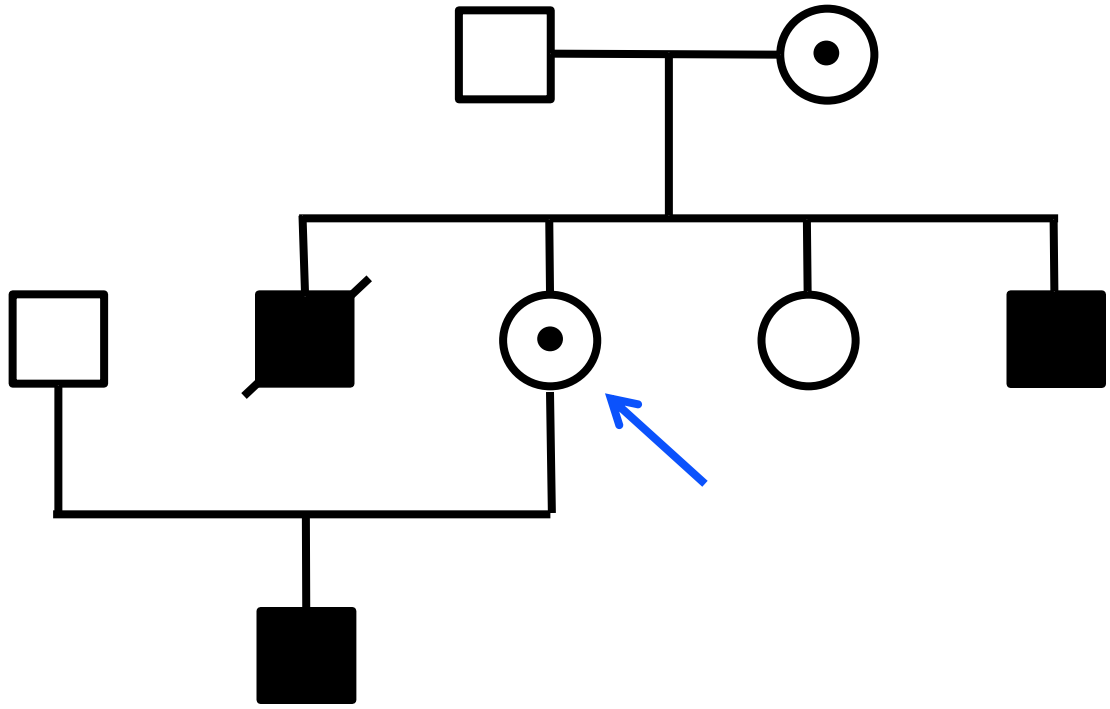

Laghmani et al, NEJM 2016

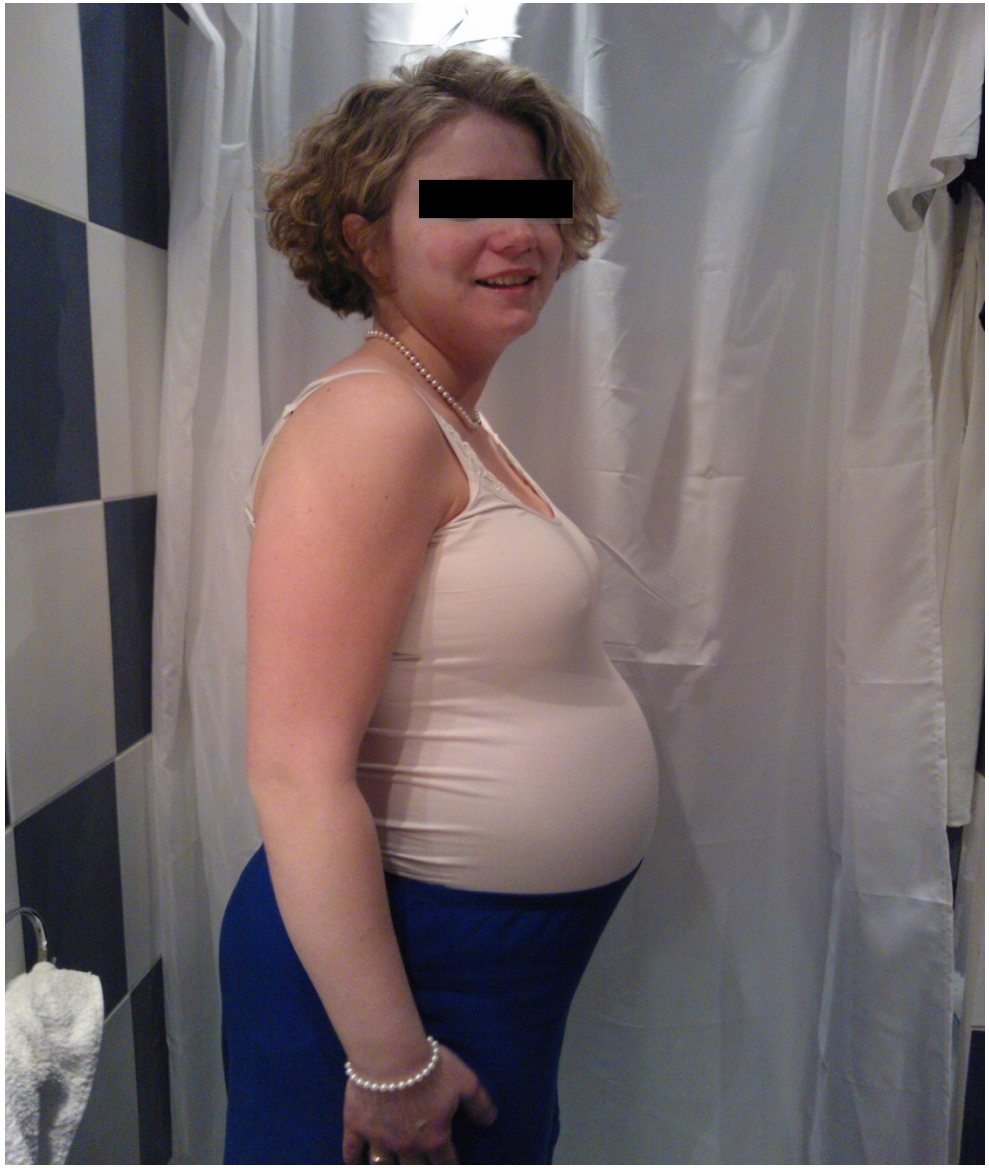

20 weeks of gestation

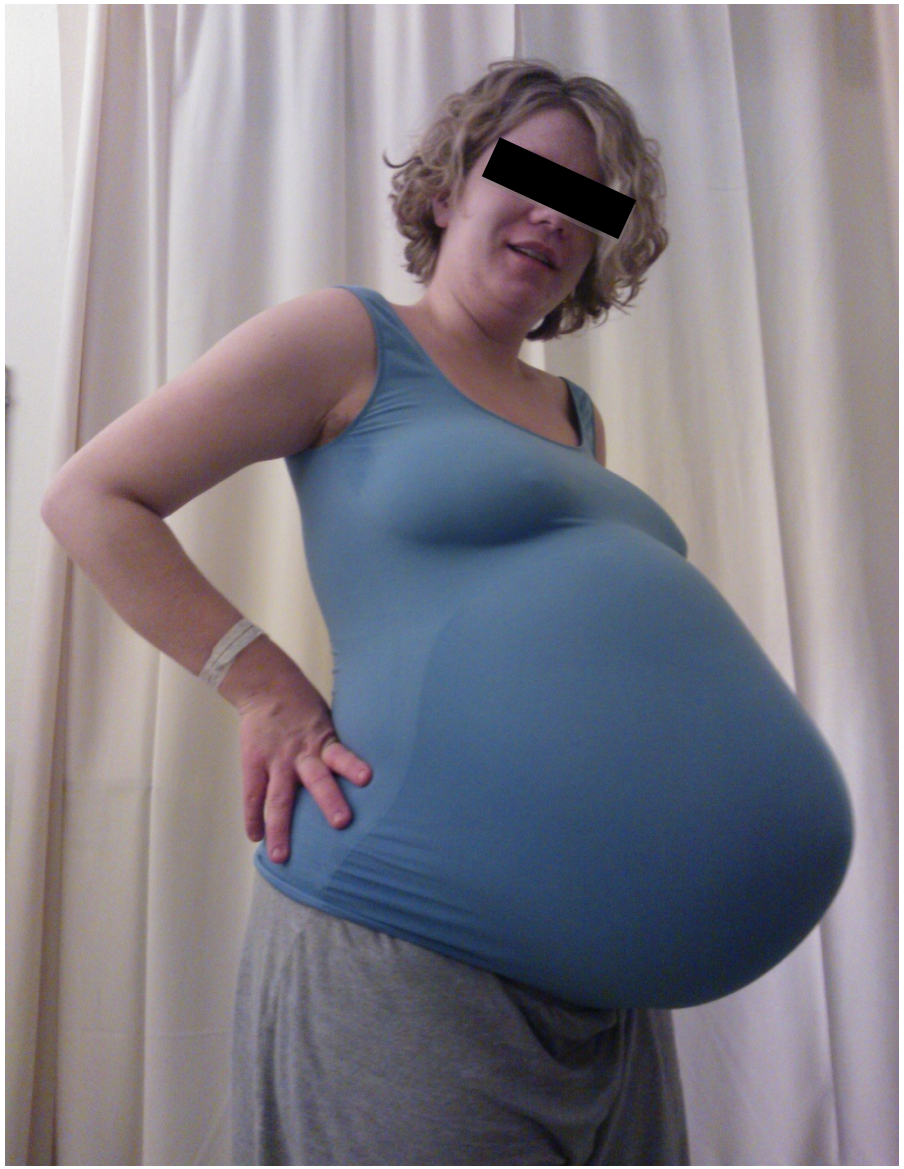

31 weeks

An X-linked disorder?

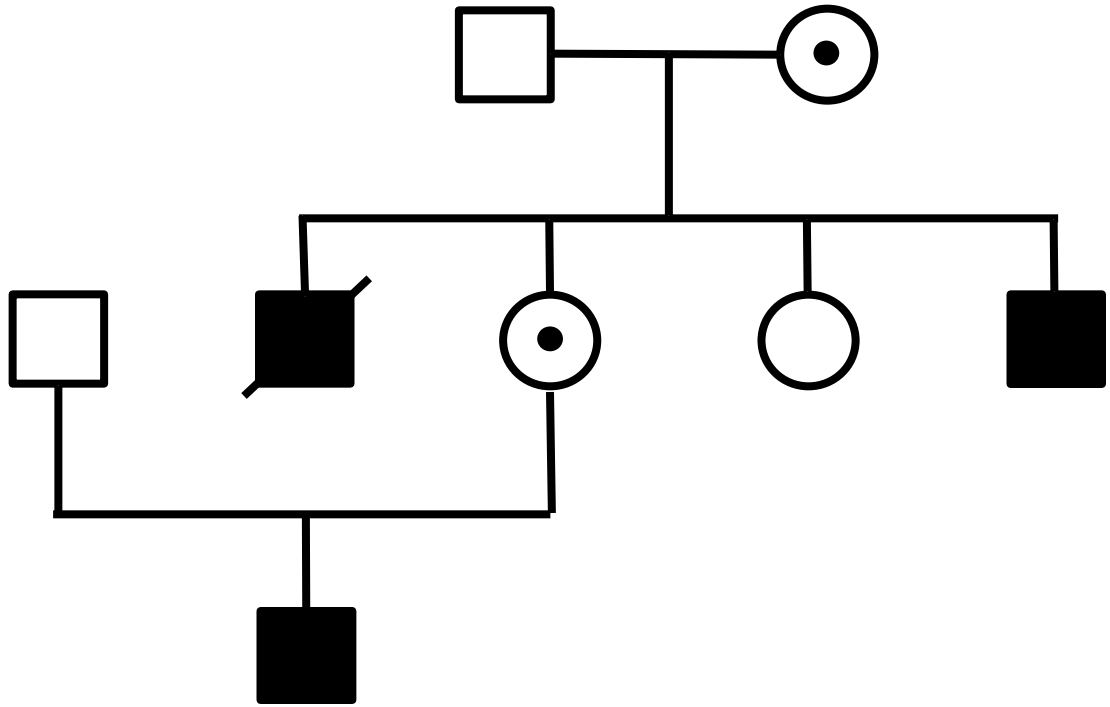

Laghmani et al, NEJM 2016

Whole exome sequencing

premature stop codon (c.1038C→G, p.Y346*)
in *MAGED2* (chrom X) encoding Melanoma associated antigen D2

the mutation segregates with the phenotype and female carriers in the index-family

Certain MAGE‘s promote ubiquitination, not shown for MAGE-D2

Interference with fetal salt and water transport ?

MAGED2 mutations in six additional families with transient Bartter syndrome

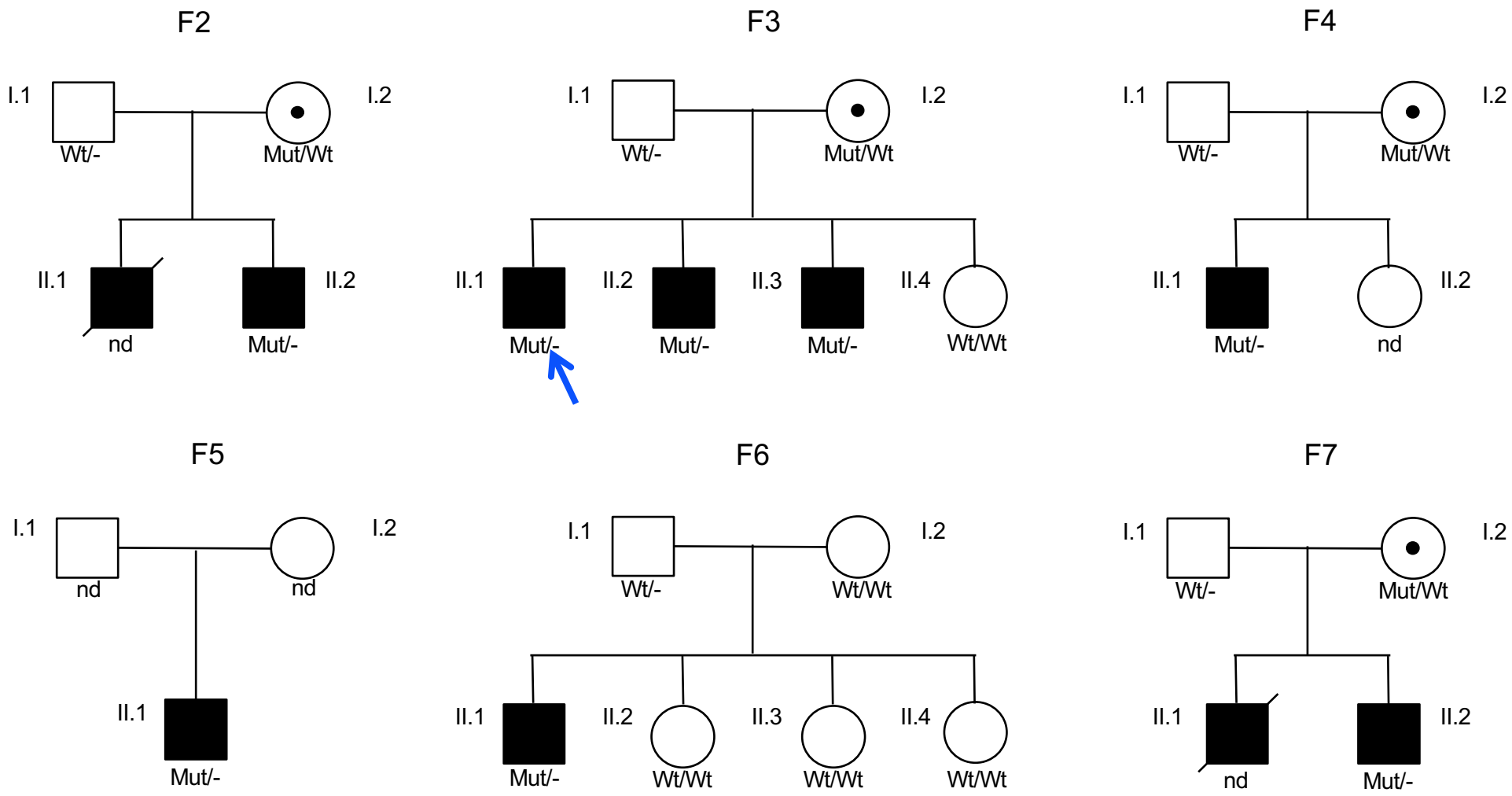

Laghmani et al, NEJM 2016

MAGED2 and acute (recurrent) Polyhydramnios ?

Rare condition affecting male fetuses, first described in 1976 in 3males (Pitkin 1976).

Polyhydramnios in 4 males (Weissman 1987).

Repeated amniocentesis with NSAIDs may be curative (Rode et al, 2007).

We studied a cohort of 11 women with acute, idiopathic polyhydramnios and male fetuses.

F8

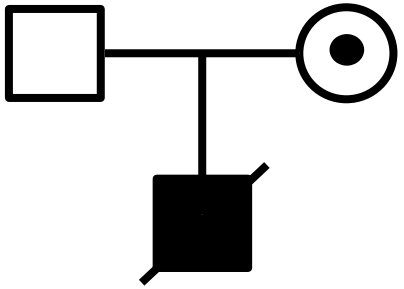

F9

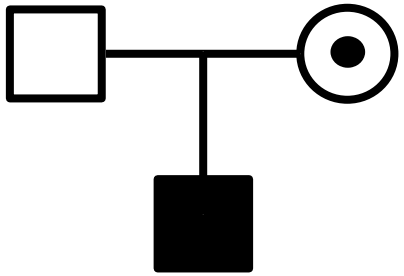

Laghmani et al, NEJM 2016

Women *with MAGED2* mutations have early & excessive polyhydramnios as shown by the amniotic fluid index (AFI)

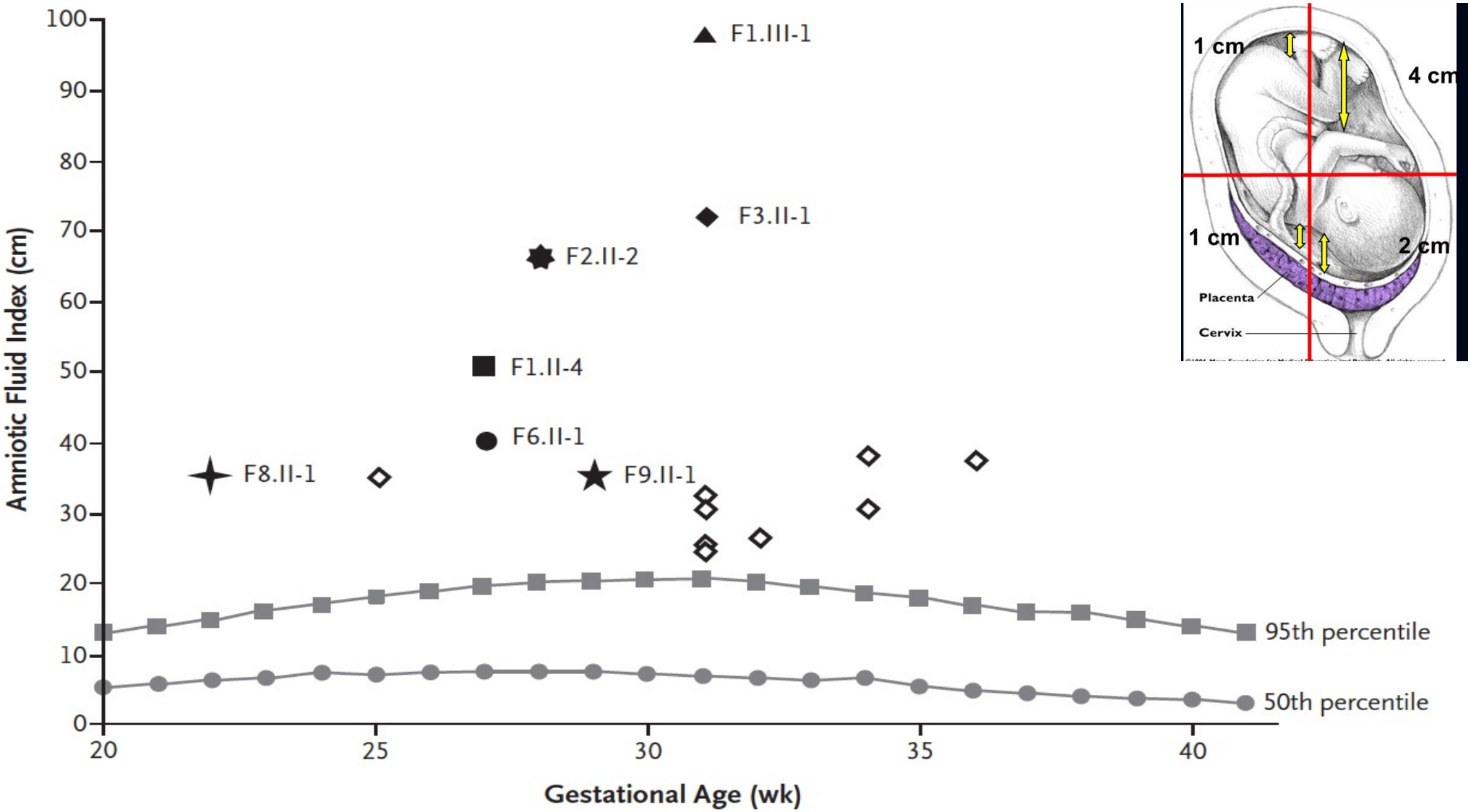

What is the explanation for the phenotype?

MAGE family designated as „tumor antigens“, most data deal with proliferation, apoptosis, etc.

Certain MAGE‘s promote ubiquitination, not shown for MAGED2

Interference with fetal salt and water transport ?

NKCC2 in human fetal control and patient tissue

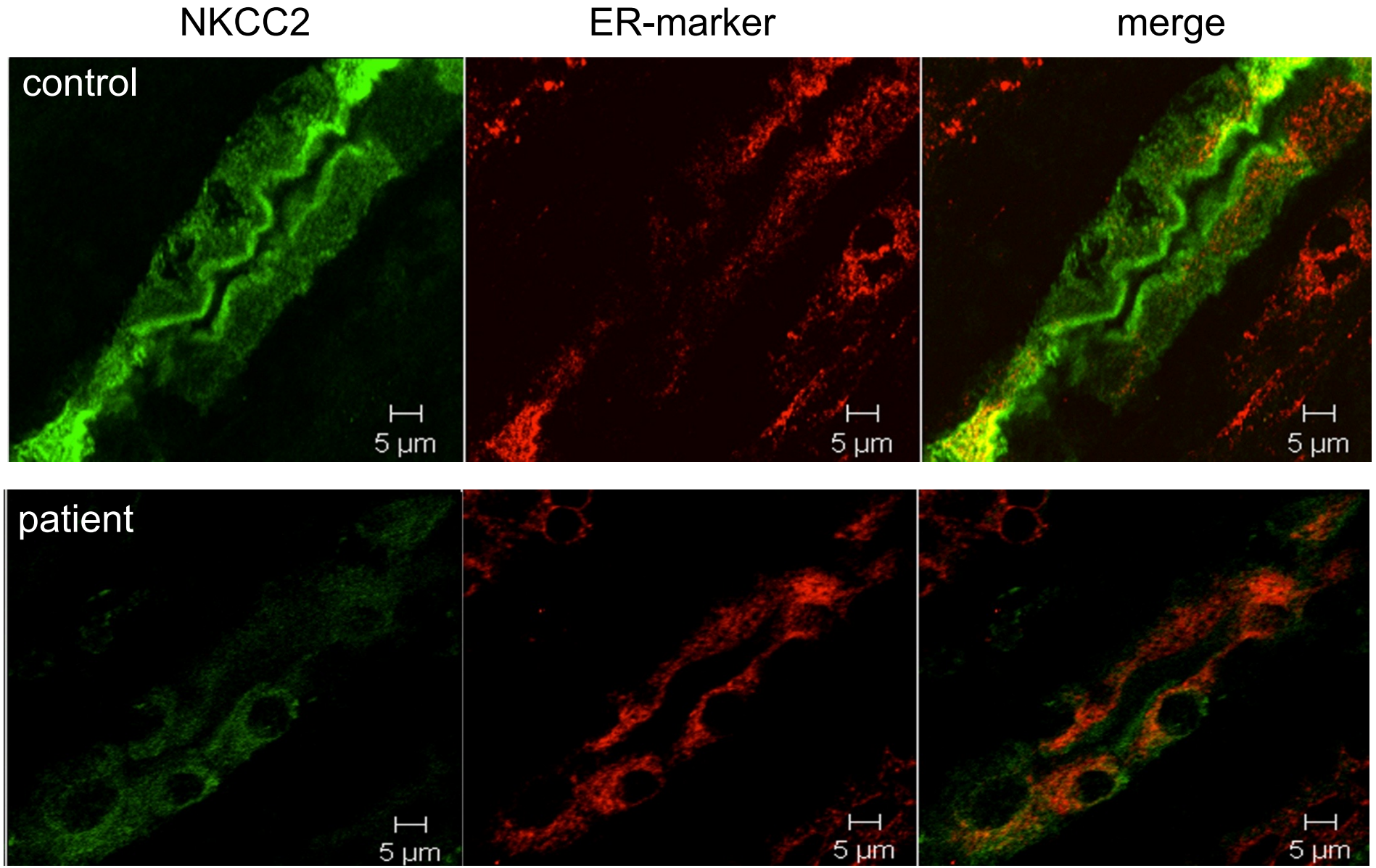

Thiazide-sensitive NCC in control and patient kidney

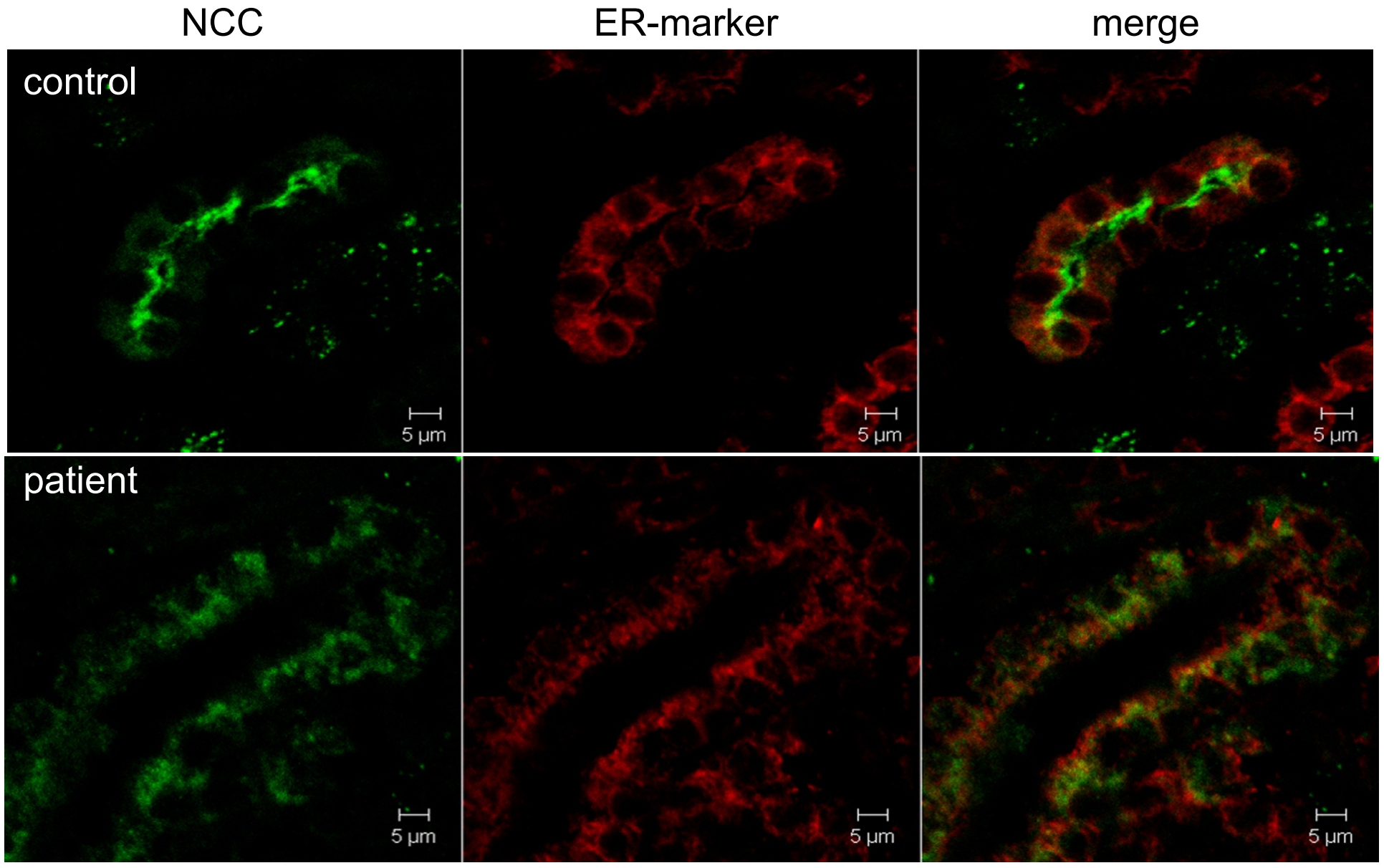

Data in French Bartter Cohort

MAGED2 mutation in 16 / 171 families (9 %).

In 44 % of male patients without mutation in another BS gene.

2 females affected, partly explained by selective X-inactivation.

High birth weight and length, even macrosomia is frequent.

Legrand et al, CJASN 2017

„Bartter-like syndromes“

Set of inherited tubular disorders with hypokalemic metabolic alkalosis

antenatal
Bartter syndrome
NKCC2
KCNJ1

Bartter syndrome/deafness
Barttin, combined Ka/Kb

X-linked transient BS
MAGE-D2

classic
Bartter syndrome
ClC-Kb

Gitelman syndrome

NCC

Pathophysiology of Bartter syndrome

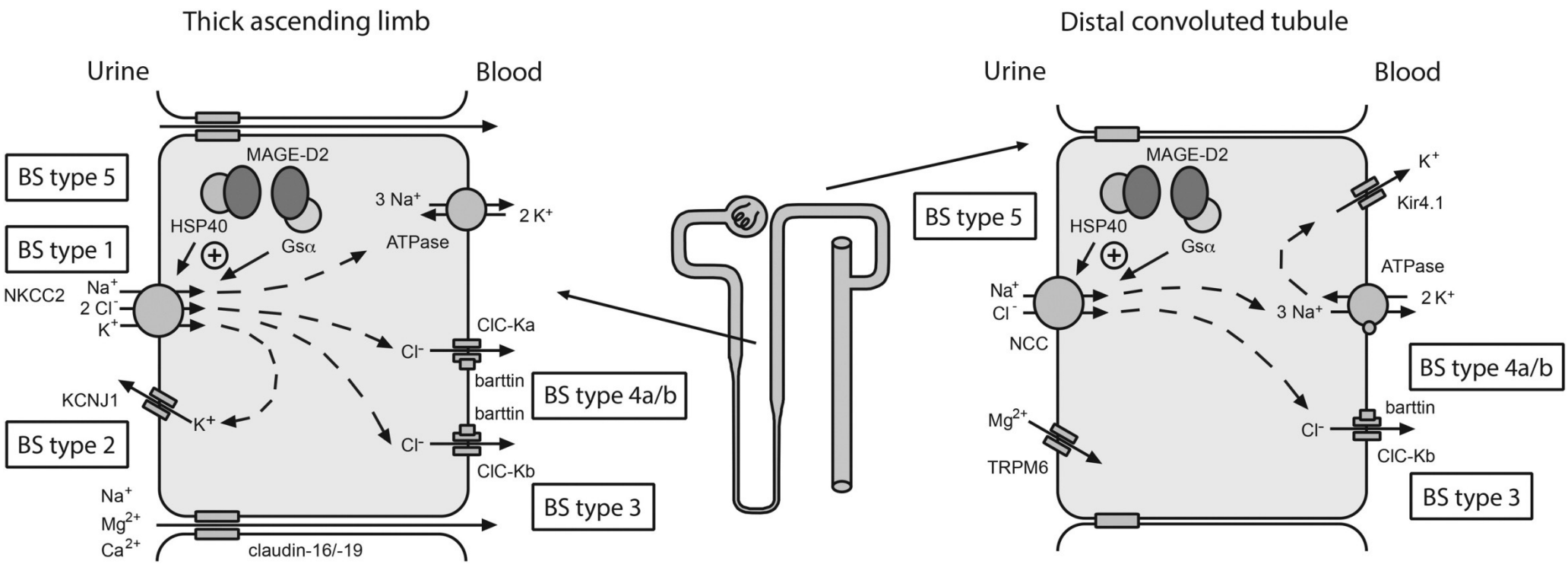

Kidney Int 2021

Molecular genetics of Bartter/Gitelman syndrome

	BS 1	BS 2	BS 3	BS 4a	BS 4b	BS 5	GS
OMIM	601678	241200	607364	602522	613090	300971	263800
Gene	*SLC12A1*	*KCNJ1*	*CLCNKB*	*BSND*	*CLCNKA* + *CLCNKB*	*MAGED2*	*SLC12A3*
Protein	NKCC2	KCNJ1 (ROMK)	ClC-Kb	Barttin	ClC-Ka + ClC-Kb	MAGE-D2	NCC
Inheritance	AR	AR	AR	AR	AR	XLR	AR

Main clinical findings in Bartter/Gitelman syndrome

Characteristic	Type 1	Type 2	Type 3	Type 4a/b	Type 5	GS
Age at onset	prenatally	prenatally	0 -5 years	prenatally	prenatally	> childhood
Polyhydramnios	severe	severe	absent/mild	severe	very severe	absent
Gestational age	32 (29-34)	33 (31-35)	37 (36-41)	31 (28-35)	29 (21-37)	regular
Leading symptoms	polyuria hypochloremia alkalosis hypokalemia	polyuria hypochloremia alkalosis neonatal hyperkalemia	hypokalemia hypochloremia alkalosis failure to thrieve	polyuria hypochloremia alkalosis hypokalemia	polyuria hypochloremia alkalosis hypokalemia	hypokalemia hypochloremia Alkalosis hypomagnesemia
Calcium excretion	high	high	variable	variable	high	low
Nephrocalcinosis	very frequent	very frequent	rare, mild	rare, mild	rare, mild	absent
Plasma Cl/Na ratio	normal	normal	decreased	decreased	increased	decreased?
Other findings			low magnesium	deafness risk for CKD ESKD	large for gestational age transient disease	chondrocalcinosis

Poll question 3

Further reading….

BRIEF REVIEW www.jasn.org

Salt-Losing Tubulopathies in Children: What's New, What's Controversial?

Robert Kleta and Detlef Bockenhauer

UCL Centre for Nephrology and Great Ormond Street Hospital NHS Foundation Trust, London, United Kingdom

executive summary www.kidney-international.org

JASN 29, 2018

Diagnosis and management of Bartter syndrome: executive summary of the consensus and recommendations from the European Rare Kidney Disease Reference Network Working Group for Tubular Disorders

Check for updates

OPEN

Martin Konrad[1], Tom Nijenhuis[2], Gema Ariceta[3], Aurelia Bertholet-Thomas[4], Lorenzo A. Calo[5], Giovambattista Capasso[6], Francesco Emma[7], Karl P. Schlingmann[1], Mandeep Singh[8], Francesco Trepiccione[6], Stephen B. Walsh[9], Kirsty Whitton[10], Rosa Vargas-Poussou[11,12] and Detlef Bockenhauer[9,13]

meeting report www.kidney-international.org

Kidney Int 99, 2021

Gitelman syndrome: consensus and guidance from a Kidney Disease: Improving Global Outcomes (KDIGO) Controversies Conference

CrossMark

OPEN

Anne Blanchard[1,2,3,4], Detlef Bockenhauer[5,6], Davide Bolignano[7], Lorenzo A. Calò[8], Etienne Cosyns[9], Olivier Devuyst[10], David H. Ellison[11], Fiona E. Karet Frankl[12,13], Nine V.A.M. Knoers[14], Martin Konrad[15], Shih-Hua Lin[16,17] and Rosa Vargas-Poussou[2,18]

Kidney Int 91, 2017

Thank you !

Next Webinars

IPNA Clinical Practice Webinars

Date: **14 Oct 2021**

Speaker: **Detlef Bockenhauer**

Topic**: Distal Renal Tubular acidosis guideline**

ESPN/ERKNet Educational Webinars on Pediatric Nephrology & Rare Kidney Diseases

Date: **19 Oct 2021**

Speaker: **Gema Ariceta**

Topic: **Claudin – related disorders**

ESPN/ERKNet Virtual Workshop on Fundamentals in pediatric Dialysis

Date: **20/21 Oct 2021**

Speaker: **Various Speakers, organized by the ERKNet Paediatric CKD & Dialysis Working Group and the ESPN Dialysis Working Group**

Topic: **Fundamentals in pediatric dialysis**

Subscribe the ERKNet and IPNA Newsletter and don`t miss Webinars!